LESSON PLAN

CLEAN ENERGY BRIGHT FUTURES
A Program of BEF

Chemical Differences in Emergency Energy Sources

Lesson 1: When the grid goes down and stays down

AUTHOR
Melody Childers

DESCRIPTION
Through an examination of media published in the five months following Hurricane Maria in 2017, students will develop an understanding of the electrical grid, the vulnerabilities of a grid system, and the immediate and long-term challenges of living without an electrical grid. This lesson will lay the foundation for the rest of the unit, establishing emergency energy sources and disaster resilience as the anchoring phenomena for the unit.

GRADE LEVEL(S)
7th, 8th

SUBJECT AREA(S)
disaster preparedness, energy resources, electrical grid, empathy

ACTIVITY LENGTH
85 minutes

LEARNING GOAL(S)
1. Students will understand the general structure of an energy grid
2. Students will develop an understanding of the living conditions in Puerto Rico after Hurricane Maria
3. Students will collaborate to brainstorm needs to support safety, health and comfort in a natural disaster setting.
4. Students will identify energy resources that one might desire to have in order meet the needs they identify.

Expected Content Understanding

STUDENT BACKGROUND

Students participating in this lesson should be familiar with the following scientific concepts and practices:

- Reading non-fiction for main idea and supporting details.

EDUCATOR BACKGROUND

Following Hurricane Maria on September 20, 2017, all of Puerto Rico was without power. The collection of information resources below is meant as a survey of a range of topics: the impact on residents, the engineering challenges, and logistical difficulties faced when there is no possibility to fix the electrical infrastructure quickly. Educators should take some time to seek out additional, current resources about the progress of restoring electricity to the entire island of Puerto Rico. This lesson was written nearly five months after the storm and there are still communities living without electricity, totaling approximately 450,000 residents. Should a more current or local event occur, consider updating this lesson to make it more relevant to your time and location.

There is a wealth of media on a variety of topics available, such as grassroots rebuilding, the role of the Army Corp of Engineers, and non-governmental organizations (NGOs). National Public Radio (NPR) is an excellent source because they provide audio for most articles / transcripts and excellent photography to support the stories. This is beneficial when one would like students to gain multiple perspective without reading for extended lengths of class time. Here are a few NPR articles to review:

Early story about the immediate needs:

https://www.NPR.org/2017/09/23/553152889/puerto-roco-update-how-one-ngo-is-helping-the-island-rebuild-after-hurricane-mar ("Puerto Rico Update: How One NGO is Helping the Island Rebuild After Hurricane Maria," NPR, September 2017)

Difficulty distributing goods:

https://www.npr.org/sections/thetwo-way/2017/09/28/554297787/puerto-rico-relief-goods-sit-undistributed-at-ports (Puerto Rico Relief Goods Sit Undistributed at Ports) ("Puerto Rico Relief Goods Sit Undistributed at Ports," NPR, September 2017)

Long waits for gas and diesel immediately after the storm, if it's even available (no audio):

https://www.npr.org/sections/thetwo-way/2017/09/26/553632771/at-a-gas-station-with-no-gas-puerto-ricans-settle-in-for-an-interminable-wait (At a Gas Station with No Gas Puerto Ricans Settle in for an Interminable Wait)

Isolated island town runs on unreliable generator station after three months: https://www.npr.org/2017/12/22/571950669/puerto-rican-island-still-in-crisis-mode-3-months-after-maria ("Puerto Rican Island Still in Crisis Mode 3 Months After Maria," NPR, December 2017)

Solution to lack of cell phone service:

https://www.npr.org/sections/thetwo-way/2017/11/17/564879549/faa-approves-drone-as-cell-phone-tower-in-the-sky-for-puerto-rico ("FAA Approves Drone as Cell Phone Tower in the Sky for Puerto Rico," NPR, November 2017)

Summary of energy production locations and grid structure in Puerto Rico:

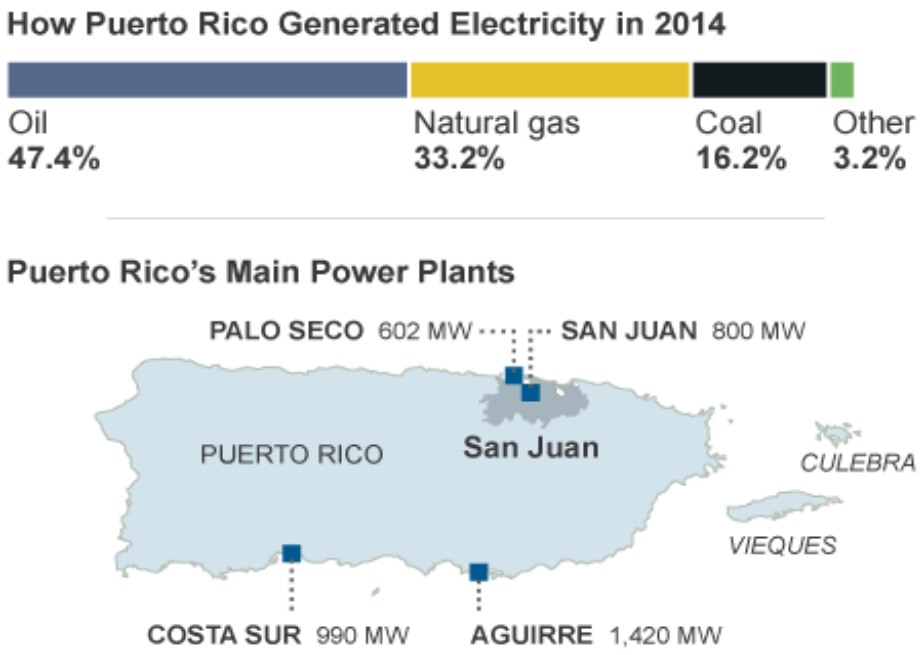

Figure 1 Puerto Rico's main production facilities,
Source: PREPA via https://www.eenews.net/stories/1060062123

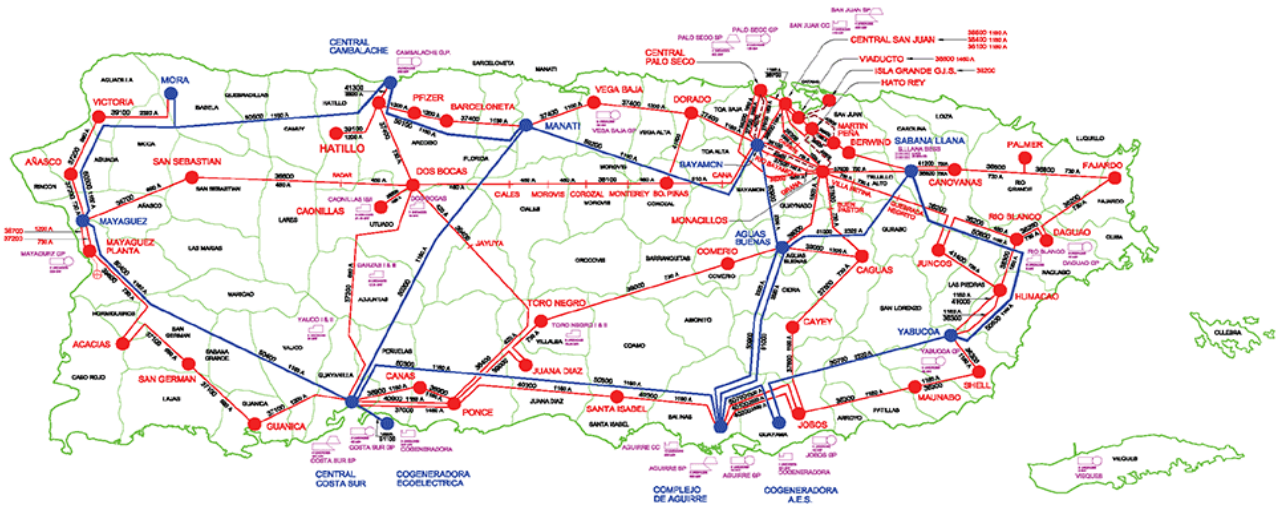

Figure 2 Puerto Rico's major transmission lines. **Source: PREPA via** https://www.eenews.net/stories/1060062123

The two images above are provided to show the complexity of the grid in Puerto Rico. You can see the main production facilities in the first map, and the major transmission lines in the second.

ElectricalEasy.com has a brief and clear description of the difference between generation, transmission, and distribution portions of the grid, as illustrated in Figure 3. More background information and diagrams about the American Grid can be found in the document "Final Report on the August 14, 2003 Blackout in the United States and Canada," dated April 2004.

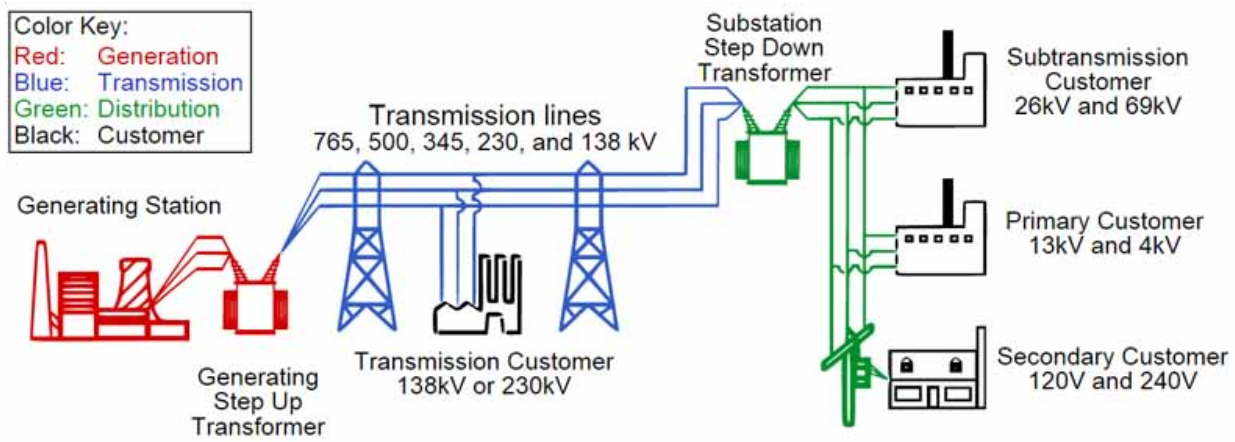

Figure 3 Simple diagram of electricity grids in North America. Source via United States Department of Energy, SVG version by User:J JMesserly - http://www.ferc.gov/industries/electric/indus-act/reliability/blackout/ch1-3.pdf, pg 13.

REQUIRED MATERIALS

HANDOUTS/PAPER MATERIALS

- Diagram: Electrical Grid
- Graphic organizer: Identifying immediate and long-term needs, match needs to garage resources.
- Print outs of news articles, or access to internet-enabled device with links.

CLASSROOM SUPPLIES

- Pencils
- Chart paper or large white boards and markers, optional, instead of graphic organizer. The benefit of chart paper would be keeping the initial thinking visible throughout the unit.

LESSON PROGRESION

PLANNING AND PREP

To prepare for this lesson, preview links to ensure that the resource links are still live. If you need to provide print copies of the articles, prepare copies. Prepare copies of the diagram of the grid and the energy needs graphic organizer.

LESSON SEQUENCE

WHAT HAPPENS WHEN THE GRID GOES DOWN?

1. (5 min) Scroll through this article to find and show the brief video footage of the storm and resulting damage: (Hurricane Maria Updates: In Puerto Rico, the Storm 'Destroyed Us'. New York Times. September, 09, 2017. https://www.nytimes.com/2017/09/21/us/hurricane-maria-puerto-rico.html)
2. The video begins with a map. Pause the video at this point and help students notice the location of Puerto Rico. Perhaps remind / teach students that Puerto Rico is a commonwealth of the United States. Its residents are U.S. citizens who can move to any U.S. state freely and can join the U.S. military. If Puerto Ricans move to any state, they can vote in presidential elections. Those residing on the island vote only in local elections.
3. (5 mins) Lead a class discussion about what they see during and after the storm. Track any questions students have so that they can acknowledge answers they discover in their research.

4. (10 min) Give students the prompt to list the reasons that restoration is taking so long as they listen to the article. Listen to the NPR story about why the grid needs so long to rebuild. (Restoration of Power in Puerto Rico will Take Months. National Public Radio. September 30, 2017. https://www.npr.org/2017/09/30/554789647/restoration-of-power-in-puerto-rico-will-take-months)

   Afterward, recap the main roadblocks and challenges to rebuilding this infrastructure.

5. (30 min) What is an electrical grid? Students read ck12.org explanation of an electrical grid: https://www.ck12.org/book/CK-12-Physical-Science-Concepts-For-Middle-School/r9/section/5.92/ Students should complete the notes on the diagram of the electrical grid. Have students list out possible ways to produce electricity (this serves as a formative assessment of prior knowledge).

   Students might need assistance in discussing what will stop different parts of the grid from working. Ask them about when they have lost power in the past and/or if they have seen problems in person with their local electrical grid. Consider your utility's educational outreach resources for localized information on these topics.

   Follow up with a Think-Pair-Share addressing the following question: How would the impact would be different when damage is sustained in the production, transmission, or distribution portions of the grid? Which one might be the hardest to fix or take the longest to repair? (In this type of activity, students take the time to answer the question individually in their notebooks or on a worksheet, then write down a partner's response, and finally share both of these responses with the class.)

6. (5 min) Listen to challenges faced by residents immediately after the storm on 9/25/2017. NPR Article with audio: Desperation in Puerto Rican Town Where 60 Percent are Now Homeless

7. (15 min) Read challenges faced by resident after four months (includes perspective of a school-aged child) Newsela.com article (no audio, but scalable reading level): ("Puerto Rican students face hardships after Hurricane Maria." Newsela.com, Newsela, 4 Feb. 2018, newsela.com/read/puerto-rico-schools-without-power/id/40033/.)

8. (10 min) Have students complete the graphic organizer that addresses immediate and long term needs to increase safety, health, and comfort. In this tool, they will brainstorm definitions (or discuss them as a class) for "safety," "health," and "comfort." Under each of these categories, they list as many short term and long term needs to achieve this standard.

9. (10 minutes) Ask students to imagine being home and experiencing a storm or other natural event when the power goes out. What might you find in and around your home to meet some of the needs listed on the graphic organizer? Add ideas to the graphic organizer. As time allows, discuss which resources would get used up, over what time span, and which ones would remain useful over a longer period of time.

ASSESMENT AND EXTENTIONS

FORMATIVE ASSESSMENT

Think-Pair-Share: How would the outcome differ if the grid was damaged in the production, transmission, or distribution section of the grid?

Graphic Organizer: Circulate as students work to see that conversations are on the right track for classifying short term and long-term safety, health, and comfort needs. Get a sense of how students are thinking about the application of various familiar resources.

SUMMATIVE ASSESSMENT

N/A

LESSON EXTENSIONS

This would be an excellent opportunity to incorporate a service learning project, such as researching students' neighborhood association's preparedness plan. Students could then distribute information to families in the school to increase awareness and give families action items to increase their capacity for independence in an emergency situation.